Model No.TR001G Cordless Rebar Tying Tool

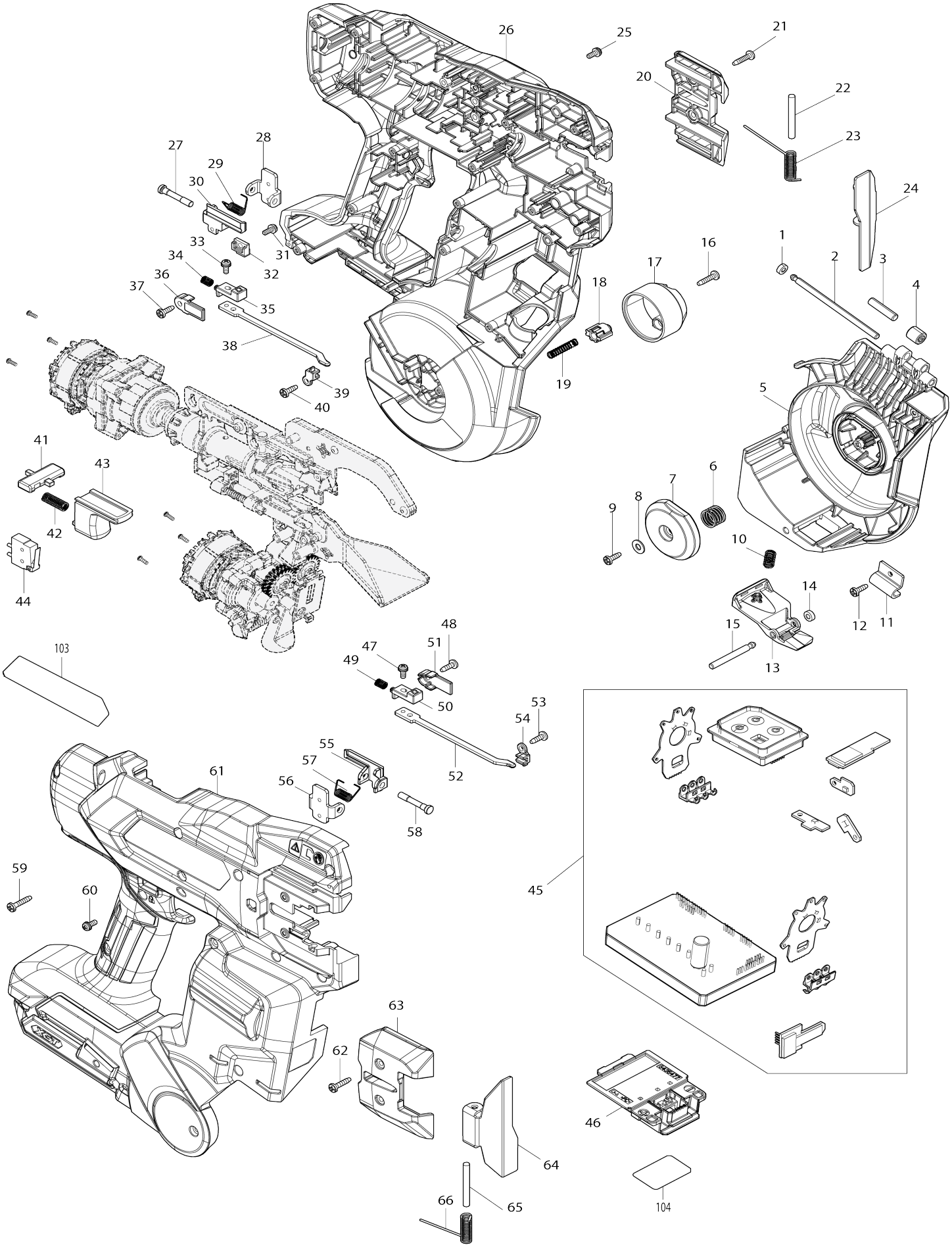

Model No.TR001G Cordless Rebar Tying Tool

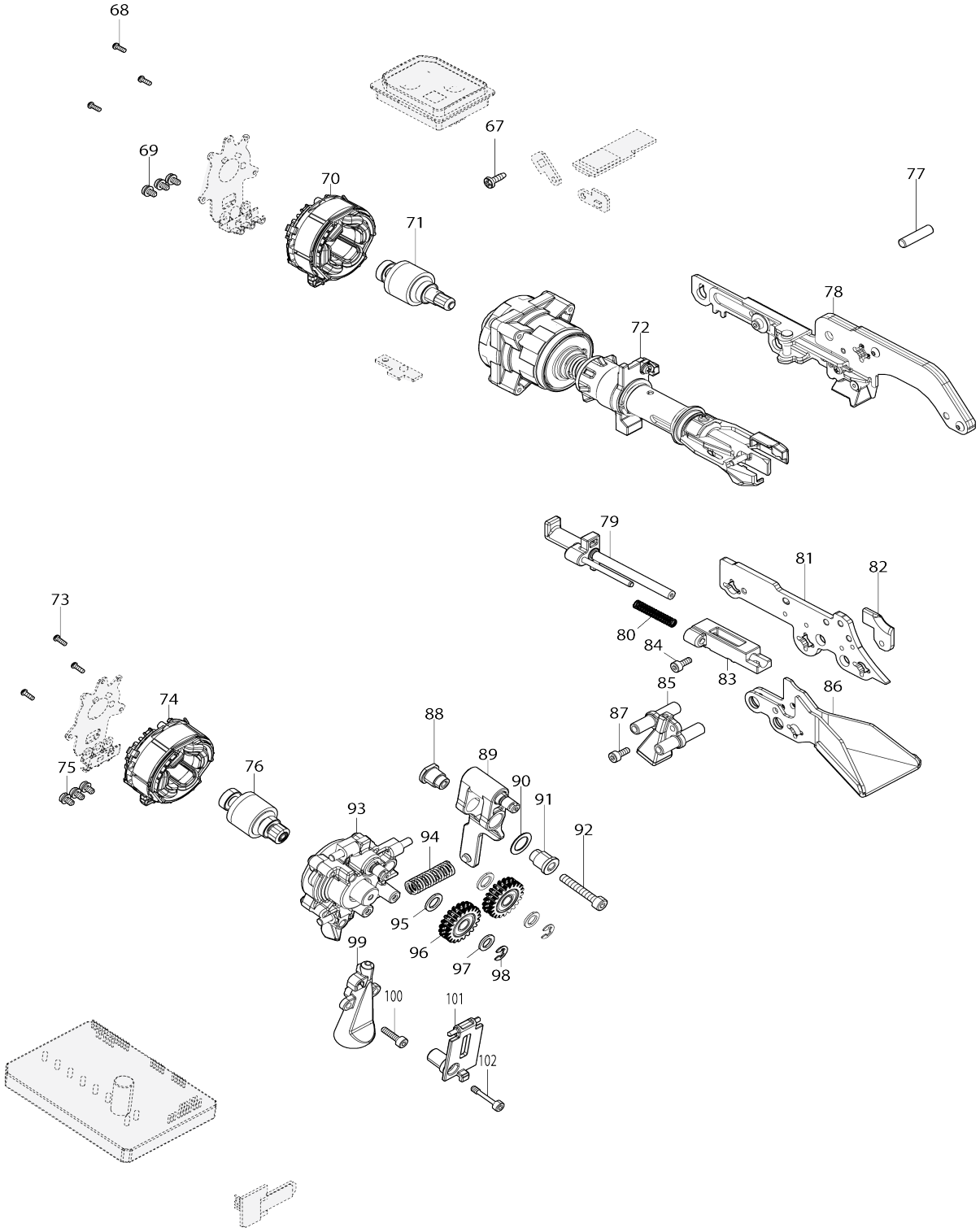

Model No.TR001G Cordless Rebar Tying Tool

Item No.	Parts No.	Description	Interchangeability	Q'ty	New/Old	Note1	Note2
001	262054-7	Urethane ring 3		1			
002	256A96-7	GROOVED PIN 4B		1			
003	268238-5	Pin 5		1			
004	212009-2	Needle bearing 509		1			
005	1412D2-8	MAGAGINE COVER COMPLETE		1			
006	232924-4	COMPRESSION SPRING 11		1	*		
006-1	232A45-8	COMPRESSION SPRING 17	S	1			
007	312H72-4	REEL BEARING		1			
008	941051-3	Flat washer 4		1	*		
008-1	941001-8	Flat washer 3	S	1			
009	266007-8	Binding head tapping screw 3X10		1			
010	233388-5	Compression spring 5		1			
011	347D47-0	GUIDE PLATE		1			
012	266007-8	Binding head tapping screw 3X10		1			
013	4131T9-3	MAGAZINE COVER LOCK		1			
014	262054-7	Urethane ring 3		1			
015	256A93-3	GROOVED PIN 4A		1			
016	266404-8	Binding head tapping screw 3X14		2			
017	312H73-2	REEL BASE		1			
018	1410Y0-7	MAGNET HOLDER D COMPLETE		1			
019	232921-0	COMPRESSION SPRING 4C		1			
020	4131U3-2	PLATE COVER		1			
021	266404-8	Binding head tapping screw 3X14		2			
022	268136-3	Pin 4		1			
023	232925-2	TORSION SPRING 4A		1			
024	347D33-1	SIDE PLATE		1			
025	911008-8	Pan head screw M3X8 WR		2			
026	1831M0-3	Housing set		1			
C10	263005-3	Rubber pin 6		2			
C20	252126-6	Hex. lock nut M4-7		2			
C30	8091F3-7	Caution label A		1			
C40	8091F5-3	Caution label B		1			
C50	8091F1-1	Indication label		1			
026		INC. 61					
027	256A89-4	SHOULDER PIN 4C		1			
028	347D30-7	STOPPER BASE		1			
029	232916-3	TORSION SPRING 4B		1			
030	313610-7	STOPPER		1			
031	911008-8	Pan head screw M3X8 WR		1			
032	1410X5-0	MAGNET HOLDER C COMPLETE		1			
033	911008-8	Pan head screw M3X8 WR		1			
034	232922-8	COMPRESSION SPRING 4B		1			
035	1410Y1-5	MAGNET HOLDER A COMPLETE		1			
036	4131U6-6	SLIDE PLATE COVER		1			
037	266007-8	Binding head tapping screw 3X1		1			

		0					
038	347D32-3	SLIDE PLATE		1			
039	347D38-1	SLIDE PLATE GUIDE		1			
040	266007-8	Binding head tapping screw 3X10		1			
041	458219-9	Trigger lock		1			
042	234037-7	Compression spring 5		1			
043	458220-4	Trigger		1			
044	632W63-2	SWITCH UNIT		1			
045	1411B8-6	CONTROLLER COMPLETE		1			
046	632P65-6	Terminal unit		1			
047	911008-8	Pan head screw M3X8 WR		1			
048	266007-8	Binding head tapping screw 3X10		1			
049	232922-8	COMPRESSION SPRING 4B		1			
050	1410Y1-5	MAGNET HOLDER A COMPLETE		1			
051	4131U6-6	SLIDE PLATE COVER		1			
052	347D32-3	SLIDE PLATE		1			
053	266007-8	Binding head tapping screw 3X10		1			
054	347D38-1	SLIDE PLATE GUIDE		1			
055	313610-7	STOPPER		1			
056	347D30-7	STOPPER BASE		1			
057	232916-3	TORSION SPRING 4B		1			
058	256A89-4	SHOULDER PIN 4C		1			
059	266130-9	Binding head tapping screw 3X16		17			
060	911008-8	Pan head screw M3X8 WR		2			
061	1831M0-3	Housing set		1			
C10	263005-3	Rubber pin 6		2			
C20	252126-6	Hex. lock nut M4-7		2			
C30	8091F3-7	Caution label A		1			
C40	8091F5-3	Caution label B		1			
C50	8091F1-1	Indication label		1			
061		INC. 26					
062	266404-8	Binding head tapping screw 3X14		2			
063	4131U3-2	PLATE COVER		1			
064	347D33-1	SIDE PLATE		1			
065	268136-3	Pin 4		1			
066	232925-2	TORSION SPRING 4A		1			
067	266007-8	Binding head tapping screw 3X10		2			
068	266490-9	Pan head tapping screw 2X6		3			
069	652069-6	Flat head screw M3X6		3			
070	629D10-8	STATOR		1			
071	619896-4	ROTOR		1			
072	122K70-6	TWIST ASSEMBLY		1			
073	266490-9	Pan head tapping screw 2X6		3			
074	629D11-6	STATOR		1			
075	652069-6	Flat head screw M3X6		3			
076	619897-2	ROTOR		1			
077	256A08-0	PIN 5		1			

078	122K54-4	CURL GUIDE ASSEMBLY		1			
079	1411G5-7	CUTTER COMPLETE		1			
080	232923-6	COMPRESSION SPRING 4D		1			
081	347D29-2	CUTTER BASE		1			
082	313613-1	WIRE BENDER		1			
083	313606-8	CUTTER GUIDE		1			
084	265634-8	Hex. socket head bolt M3X8		4			
085	313608-4	WIRE GUIDE B		1			
086	347D34-9	CURL GUIDE C		1			
087	265634-8	Hex. socket head bolt M3X8		1			
088	327E72-3	SHOULDER SLEEVE 4B		1			
089	122K71-4	RELEASE LEVER ASSEMBLY		1			
090	253623-5	FLAT WASHER 9		1			
091	327E71-5	SHOULDER SLEEVE 4A		1			
092	922147-9	Hex. socket head bolt M4X25		1			
093	122K72-2	FEED GEAR BASE ASSEMBLY		1			
094	232919-7	COMPRESSION SPRING 6		1			
095	253632-4	FLAT WASHER 7		2			
096	137328-4	Spur gear 21 assembly		2			
097	253077-6	Flat washer 6		2			
098	961011-9	Stop ring (EXT) E-4		2			
099	313603-4	WIRE GUIDE A		1			
100	266080-8	Hex. socket head bolt M3X12		2			
101	4131T8-5	GEAR COVER		1			
102	265E18-0	H.S.H.BOLT M3X17		1			
103	8151G5-0	Name plate TR001G		1			
104	8151G9-2	Serial No. label TR001G		1			
A01	194381-3	Oil vessel set		1			
A02	266622-8	Truss head screw M4X12		1			
A03	347D31-5	HOOK		1			
A04	783208-8	Hex. wrench 2.5		1			
A05	821552-6	Connector plastic case (type 4)		1			
C10	453974-8	Latch		4			
A06	836433-1	Inner tray		1			
A07	***DC40RA	DC40RA FAST CHARGER		1			
A07		COMPO-PARTS					
A09B	191B26-6	Battery BL4040 set		2			
A09C	1917Y6-7	BATTERY BL4040F SET		2			
F01	1915N0-0	Tie wire set		1			
F02	1915N1-8	Galvanized tie wire set		1			
F03	1915N2-6	Poly coated tie wire set		1			
F04	1915N3-4	Stainless steel tie wire set		1			
F05	1915N6-8	EXTENSION HANDLE SET		1			