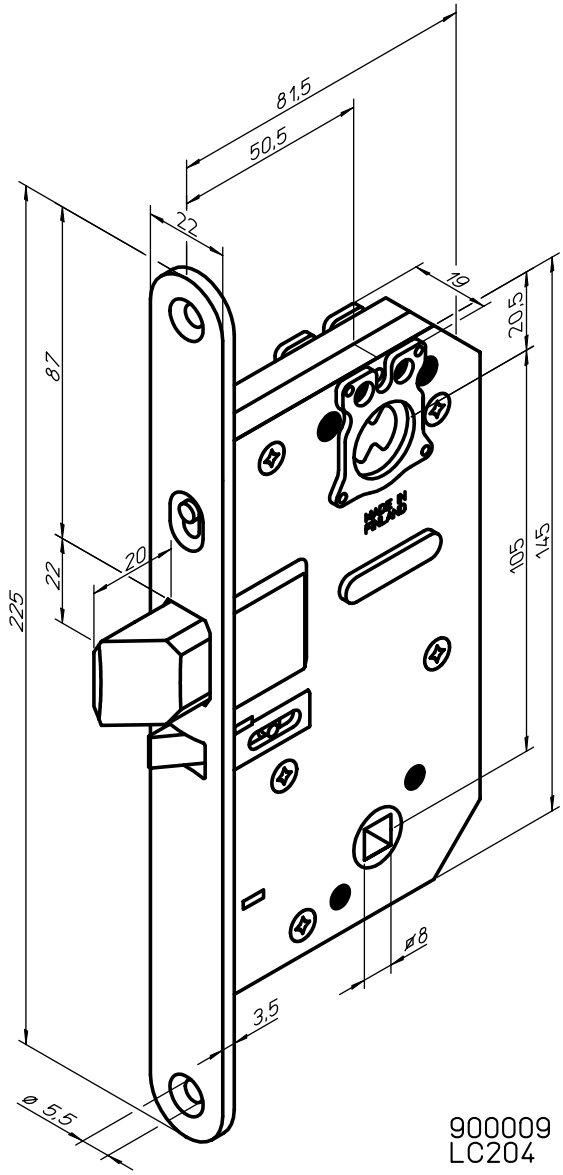

900009
LC204