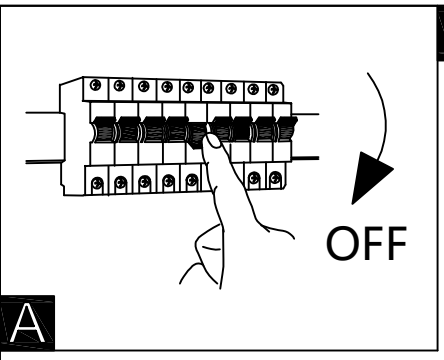

A

B

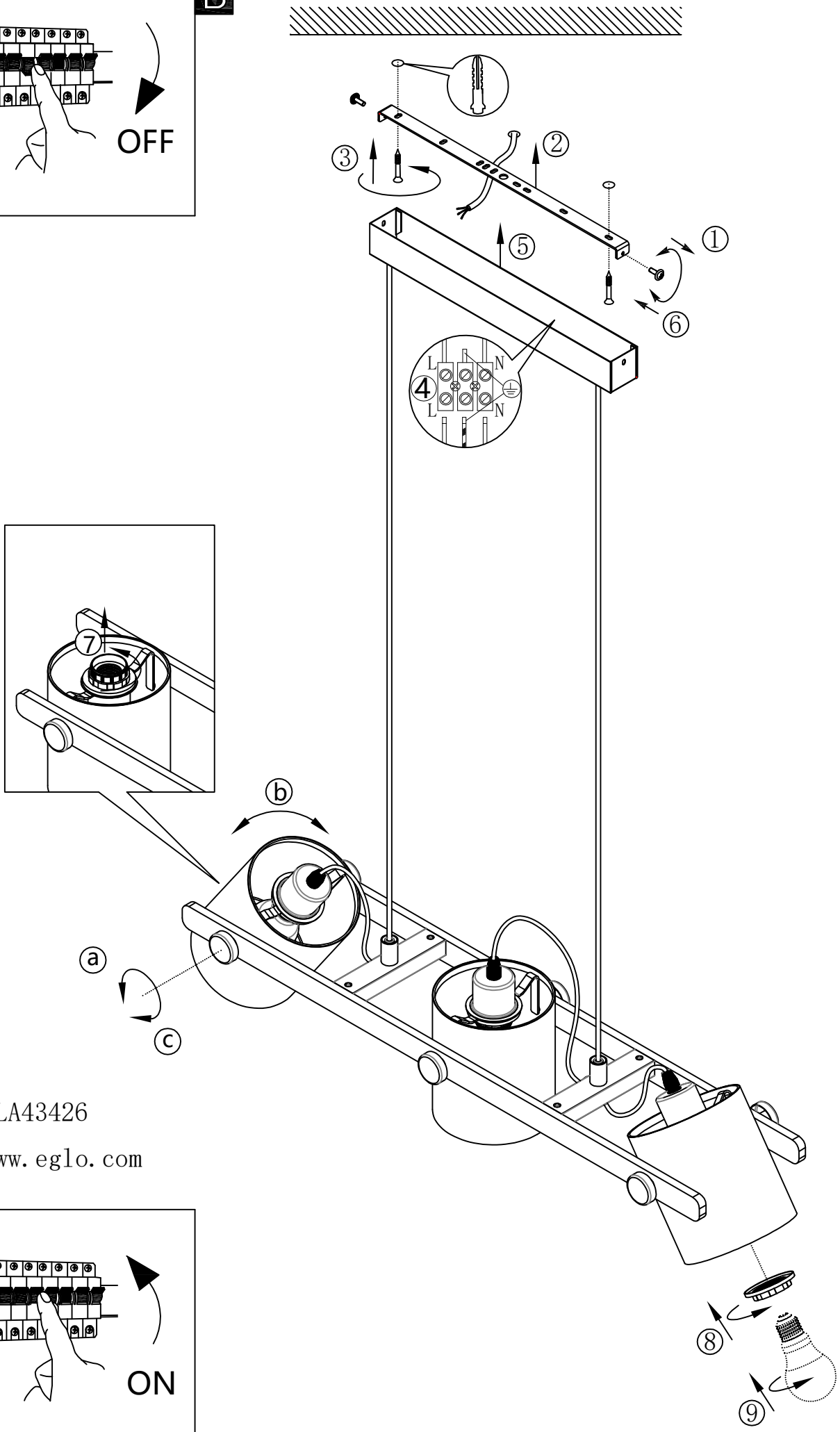

BLA43426

www.eglo.com

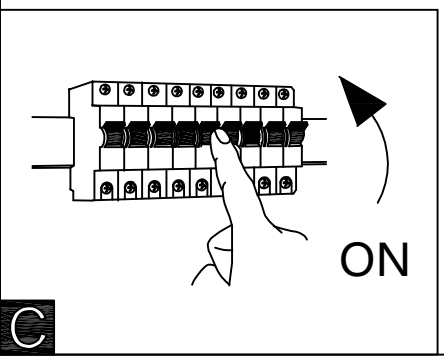

C