FREMONT 1-KIT IP23 4000K | DOWNLIGHT | BLACK

47860103

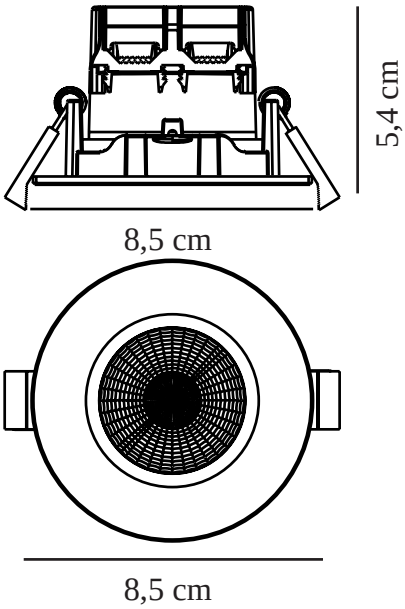

Voltage (V): 220-240 Volt
IP degree: IP23
Class (Class 1, Class 2, Class 3): Class 2 (Double isolated)
Socket type: LED Module
Dimmerable: True
Parallel connection: True

Primary material: Metal
Secondary material: Plastic
Colour: Black

Height (cm): 5.4
Built In Spot Diameter (cm): 8.5
Built In Width (cm): 17.2
Mount directly into insulation: False
Tilt Angle (°): 12

EAN: 5701581422582
TUN: 1984845
Item Number: 47860103
Pcs Per Master Carton: 3

Sales Box Height (cm): 13
Sales Box Width(cm): 13
Sales Box Depth (cm): 7
Sales Box Volume m³ : 0.0012
Product net weight (kg): 0.12

Brightness of light (Lumen): 380
Colour temperature (Kelvin): 4000
Ra-value : 80
Lifetime (hours): 25000
Beam angle (°) : 36
Candela (cd) (for directional lamp only): 650
Energy class: F
Actual watt (W): 4.5

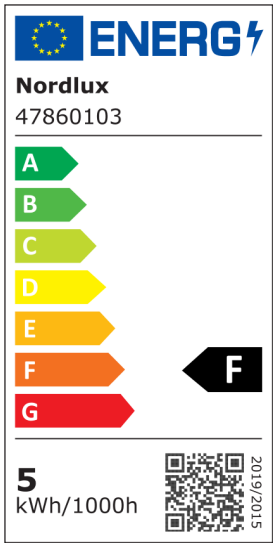

• Stepless dimming via a wall-mounted dimmer switch • Parallel connection possible
• 5-year LED guarantee

Fremont is a recessed LED spotlight with dimmable LEDs that can be tilted for a directional light.

Fremont has a long lifespan of 25,000 hours and emits a cold white light (4000 kelvin).