09760_GX_ALOHA
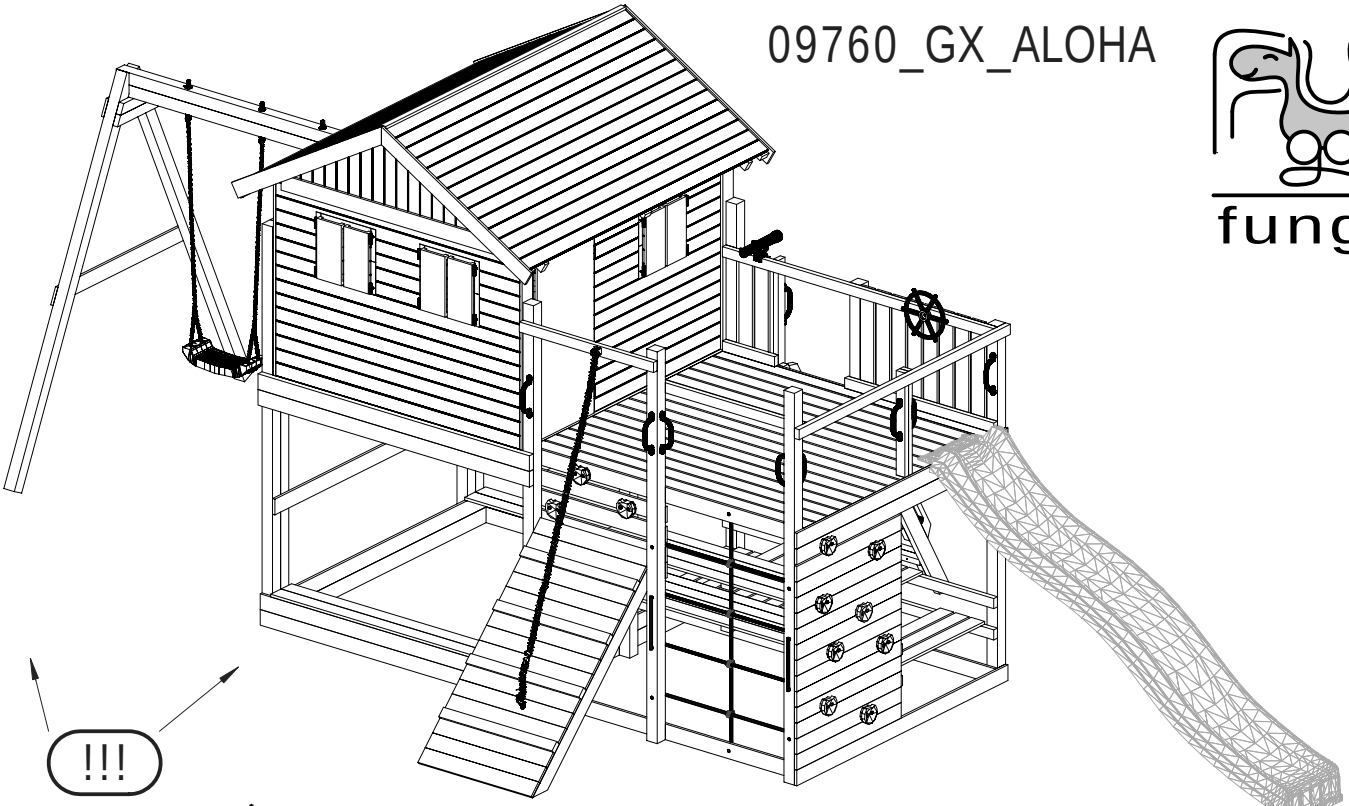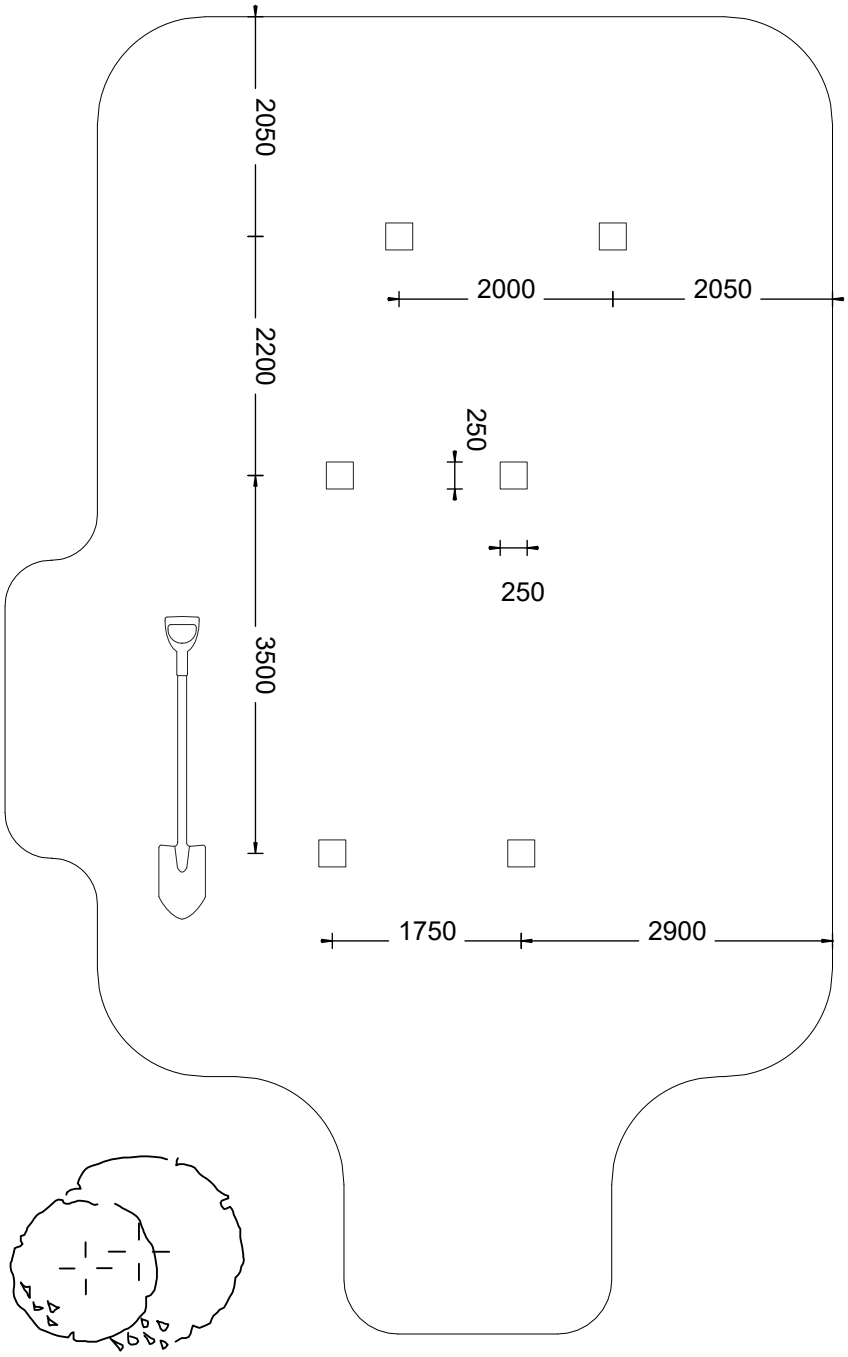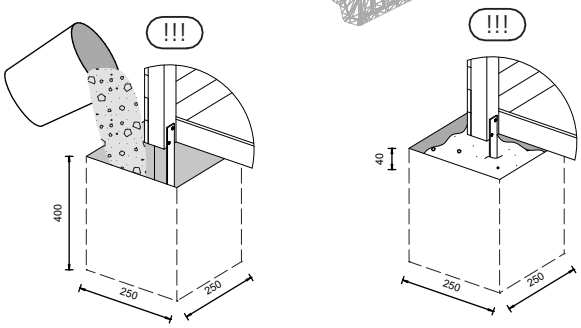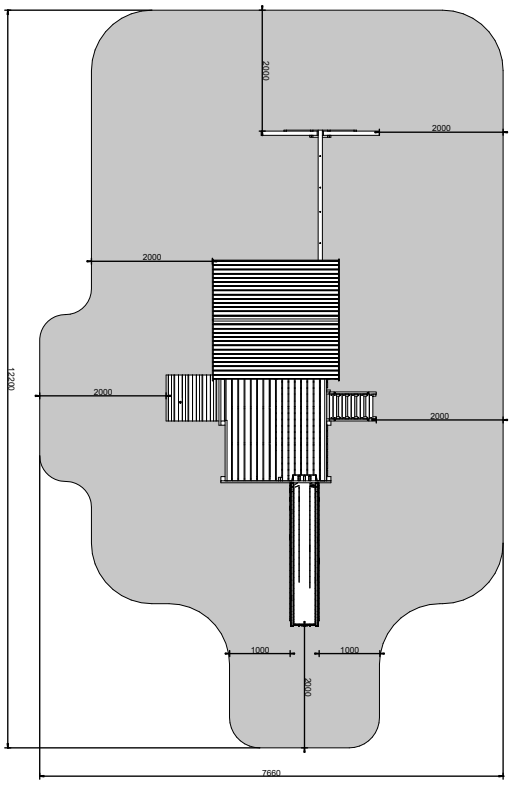
fungoo®